SUNSTAR传感与控制 http://www.sensor-ic.com/ TEL:0755-83376549 FAX:0755-83376182 E-MAIL:szss20@163.com

OUTLINE DRAWING

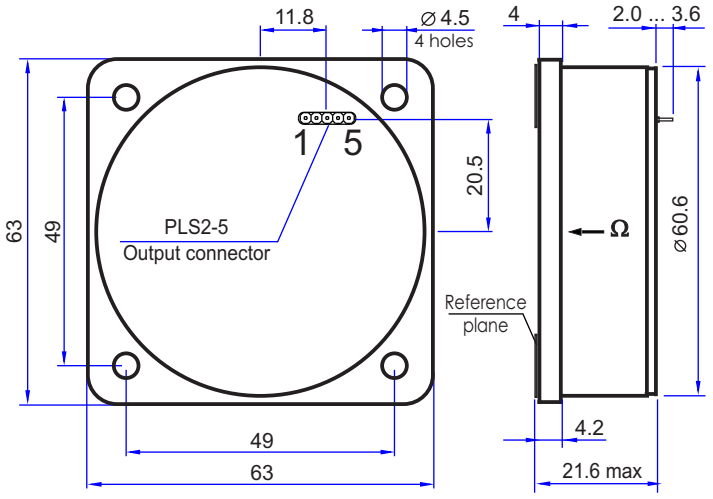

MAIN PARAMETERS (typical values)

♦ Rate range	230 deg/s
Scale Factor (SF)	6 mV/deg/s
Angle random walk	0.03 deg /√h
Bias stability, RMS	3 deg / h
SF stability, RMS	0.1 %
Readiness time	1 s

ENVIRONMENT

♦♦♦ Temperature operating	-30°C ... +70°C
♦♦♦♦ endurance	-55°C... +85°C
Vibration (operating), RMS	2 g, 20Hz... 2000Hz
Vibration (endurance), RMS	6 g, 20Hz... 2000Hz
Shocks (endurance)	90 g, 1 ms
Acceleration (operating)	5 g
Acceleration (endurance)	20 g, 5 s

RELIABILITY

MTBF	60000 hours (20°C, predicted)
♦♦ Lifetime (predicted)	15 years

♦ Precision class - ④
♦♦ Estimated for low humidity
♦♦♦ Operating temperature - temperature of built-in temperature sensor (see table 2).
♦♦♦♦ Endurance temperature - environment temperature. Sensor is turned off.

DIGITAL OUTPUT

1. Asynchronous RS232 port, 8 bit data, 1 stop bit, no parity control.

2. Transmission rate (default) - 115 kBod (repetition rate ~ 1.2 kHz).
   Option: - 38 kBod (repetition rate ~ 0.3 kHz).

3. Sensor output voltage = 2.5 RATE / 2^{23} V, RATE is a binary complementary 24-bit word (see Table 1).

4. Additional data (Xdata) - temperature (taken from AD TMP36 sensor), supply voltage, consumption current. These data (16 bits each) are transmitted in series of 16 sendings according to the status of COUNTER (see Table 2).

DESCRIPTION OF OUTPUT CONNECTOR **PLS2-5**

Contact	Name	Comments
1	**RS232 TXD**	Digital output RS232
2	**+ 5 V**	Power input +5V ± 0.25V, 300mA max, ripple 10mV max within 0-1MHz
3	Service	Do not use
4	Service	Do not use
5	**GND**	Power return line, ground

Table 1. Digital data format and data block content

SOD (1 byte)	Start of Data DD hex
Data Block (5 bytes)	1st byte RATE lowest byte (L) 2nd byte RATE highest byte (H) 3rd byte RATE middle byte (M) 4th byte COUNTER status 5th byte some of Xdata
LCC (2 bytes)	Lower 2 bytes of sum of Data Block
Total - 8 bytes	

RECOMMENDATIONS AND PRECAUTIONS

1. Do not deform housing
2. Fragile components inside - no shocks, no drop
3. It is recommended to use 2 diagonal screws with elastic washers for mounting.
4. Treat as electrostatic sensitive unit
5. Is designed to be mounted inside water protected equipment
6. Increased humidity shortens essentially lifetime
7. Power must be off during connecting
8. Soldering to contacts - by low-temperature solder

Table 2. X data content

Counter	Byte	Xdata
00	H	Temperature (C)
01	L	HL250 / 2^{15} - 50
02	H	Supply voltage (V)
03	L	HL2.5 / 2^{15} / 0.25
04	H	Consumption current (A)
05	L	HL2.5 / 2^{15} / 10
06...0F		Reserved

PHYSICAL PARAMETERS

1. Ω - sensing axis, 90°± 1° to the reference plane
2. Dissipation - 1 W
3. Weight - 60 gram (80 gram max)
4. Volume - 0.07 litre
5. Housing material - plastic
6. Tolerances per ISO 2768-m
7. Ingress protection class - IP67

SUNSTAR传感与控制 http://www.sensor-ic.com/ TEL:0755-83376549 FAX:0755-83376182 E-MAIL:szss20@163.com