SUNSTAR传感与控制 http://www.sensor-ic.com/ TEL:0755-83376549 FAX:0755-83376182 E-MAIL:szss20@163.com

TEMPERATURE SENSOR

The TEMPERATURE SENSOR is assembled one with various parts and thermistor devices according to the required applications. Its electric characteristics are the same as those of thermistor devices. Variable type of sensor can be utilized for detecting or controlling temperature because its operating temperature range is wide from −50 to +300°C. Standard TEMPERATURE SENSOR is available in accordance with the applications such as measurements of liquid, atmosphere and surface temperature.

External dimensions

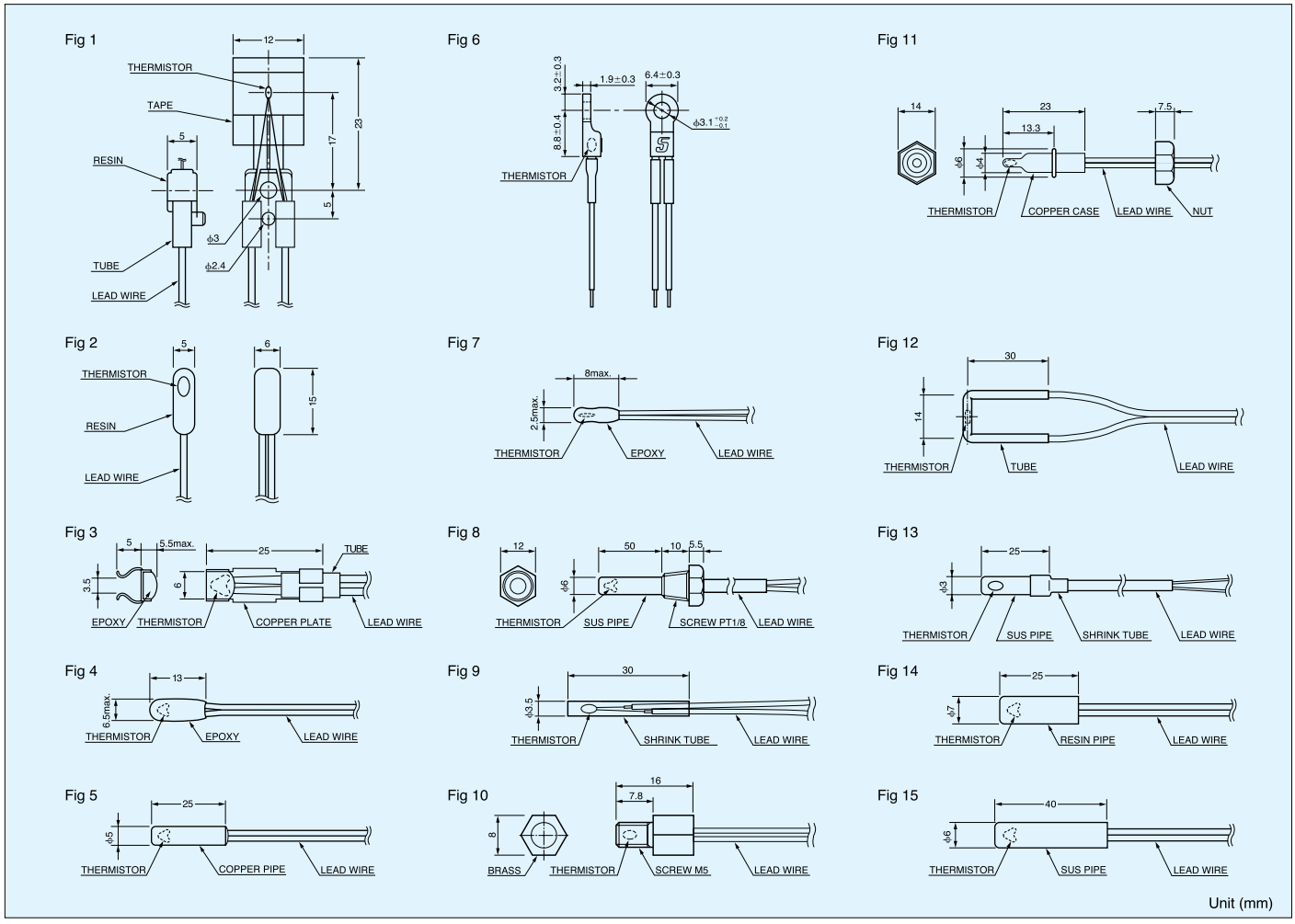

Specifications

Fig	Thermal Time constant(s)			Dissipation factor (mW/°C) Approx.	Category temperature range (°C)	Application	Thermistor
	Air	Water	Heater				
1	–	–	1.5	0.4	−30～+230	Surface temp. sensor for OA equipment.	BT
2	75	–	–	2.6	−30～+105	Air temp. sensor for general use.	AT
3	40	–	–	4	−30～+105	Surface temp. sensor for general use.	AT
4	70	–	–	5	−30～+110	Air temp. sensor for air conditioner.	AT(ET)
5	166	–	–	3.7	−30～+110	Air temp. sensor for air conditioner.	AT(ET)
6	65	–	–	3	−40～+110	Surface temp. sensor for general use.	AT
7	10	–	–	2	−30～+ 90	Surface temp. sensor for rechargeable battery.	AT
8	–	5	–	4.5	−30～+105	Water (Oil)temp. sensor for general use.	AT(ET, GT)
9	–	3	–	1.1	−50～+200	For general use.	BT
10	70	–	–	5	−50～+250	Inner temp. sensor for general use.	GT(BT)
11	–	1.7	–	1.0	−30～+100	Fast response water temp. sensor	ET
12	35	–	–	2.1	−50～+200	Surface temp. sensor for cooker.	CT
13	85	–	–	1.1	−30～+100	Air temp. sensor for general use.	ET
14	–	20	–	1.3	−30～+105	For general use.	AT(ET)
15	260	–	–	3.6	−30～+105	For general use.	AT(ET)

SUNSTAR自动化 http://www.sensor-ic.com/ TEL: 0755-83376489 FAX:0755-83376182 E-MAIL:szss20@163.com